INSTALLATION INSTRUCTIONS 320

Effective date: August 1, 2026
Supercedes: All Previous

NOT TO SCALE

ROCKWOOD®

ASSA ABLOY

Experience a safer
and more open world

ROCKWOOD 320 SERIES LATCH PROTECTOR

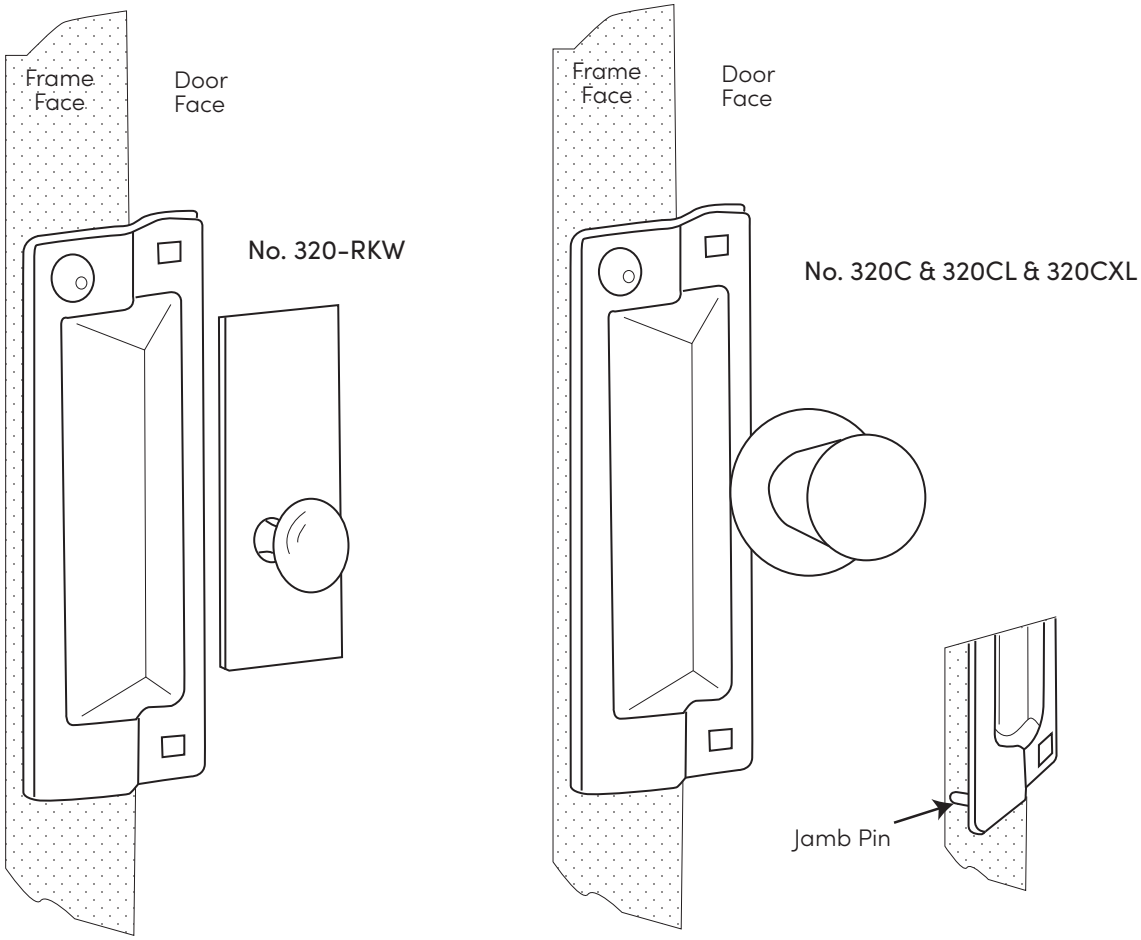

Material Size: 3" x 11"

1. Mark holes 7/8" from door edge.
2. Drill 5/16" holes through door.
3. Recessed cap nuts require 7/16" bore.
4. Tighten nuts with 3/16" hexagon wrench.
5. Drill face of frame for jamb pin.

Reversible Unit.

Rockwood Manufacturing Company
300 Main St.
Rockwood, PA 15557
www.rockwoodmfg.com
1 800 458 2424

Rockwood is a brand associated with ASSA ABLOY Accessories and Door Controls Group, Inc.
Copyright © 2017-2026, ASSA ABLOY Accessories and Door Controls Group, Inc. All rights reserved. Reproduction in whole or in part without the express written permission of ASSA ABLOY Accessories and Door Controls Group, Inc. is prohibited. Printed in the U.S.A 31527 8/26